HYUNDAI

Dishwasher

User Manual

HJI104500ED

GENUINE PRODUCT OF
HYUNDAI CORPORATION

Thank you for choosing this product.

This user manual contains important information on safety and instructions intended to assist you in the operation and maintenance of your appliance.

Please take the time to read this user manual before using your appliance and keep this book for future reference.

Icon	Type	Meaning
	**WARNING**	Serious injury or death risk
	**RISK OF ELECTRIC SHOCK**	Dangerous voltage risk
	**FIRE**	Warning; Risk of fire / flammable materials
	**CAUTION**	Injury or property damage risk
	**IMPORTANT**	Operating the system correctly

CONTENTS

1 SAFETY INSTRUCTIONS 4
1.1 General Safety Warnings 4
1.2 Installation Warnings 5
1.3 During Usage 6
2 INSTALLATION 8
2.1 Machine Positioning 8
2.2 Water Connection 8
2.3 Water Inlet Hose 8
2.4 Drain Hose (Model Depending) 9
2.5 Electrical Connection 9
3 TECHNICAL SPECIFICATIONS 10
3.1 General Appearance 10
3.2 Technical Specifications 10
4 BEFORE USING THE APPLIANCE 12
4.1 Preparing Your Dishwasher For First Use 12
4.2 Salt Usage (IF AVAILABLE) 12
4.3 Fill The Salt (IF AVAILABLE) 12
4.4 Test Strip 13
4.5 Water Hardness Table 13
4.6 Water Softener System 13
4.7 Setting 13
4.8 Detergent Usage 14
4.9 Filling The Detergent 14
4.10 Using Combined Detergents 14
4.11 Rinse-aid Usage 14
4.12 Filling The rinse-aid and setting 14
5 LOADING YOUR DISHWASHER 16
5.1 Recommendations 16
5.2 Alternative Basket Loads 19
6 PROGRAMME TABLE 21
7 THE CONTROL PANEL 22
8 CLEANING AND MAINTENANCE 25
8.1 Filters 25
8.2 Spray Arms 26
8.3 Drain Pump 26
9 TROUBLESHOOTING 27

1 SAFETY INSTRUCTIONS

1.1 General Safety Warnings

- Read these instructions carefully before using your appliance and keep this manual for future reference.

⚠ Please check the packaging of your machine before installation and the outer surface of the machine once the packaging has been removed. Do not operate the machine if it appears damaged or if the packaging has been opened.

- Packaging materials protect your machine from any damage that might occur during transportation. The packaging materials are environmentally friendly as they are recyclable. Use of recycled material reduces raw material consumption and decreases waste production.

⚠ This appliance can be used by children aged from 8 years and above, and by persons with reduced physical, sensory or mental capabilities or lack of experience and knowledge if they have been given supervision or instruction concerning the use of the appliance in a safe way and understand hazards involved. Children should not be allowed to play with the appliance.

⚠ Remove packaging and keep it out of reach of children.

⚠ Keep children away from detergents and rinse aids.

⚠ There may be some residue left in the machine after washing. Keep children away from the machine when it is open.

1.2 Installation Warnings

- Choose a suitable and safe place to install your machine.
- Only original spare parts should be used with the machine.

⚠⚠Unplug the machine before installation.

⚠ Your machine must only be installed by an authorised service agent. Installation by anyone other than an authorised agent may cause your warranty to be void.

⚠Check that the indoor electrical fuse system is connected in line with safety regulations.

⚠ All electrical connections must match the values on the plate.

⚠⚠ Ensure the machine does not stand on the electrical supply cable.

⚠Never use an extension cord or a multiple socket connection.

⚠ The plug should be accessible after the machine is installed.

- After installation, run your machine unloaded for the first time.

⚠⚠The machine must not be plugged in during positioning.

⚠Always use the coated plug supplied with your machine.

⚠⚠If the electrical cable is damaged, it should only be replaced by a qualified electrician.

- Connect the hose directly to the water inlet tap. The pressure supplied by the tap should be a minimum of 0.03 MPa and a maximum of 1 MPa. If the pressure exceeds 1 MPa, a pressure relief valve must be fitted between the connection.

1.3 During Usage

- This machine is for domestic use only; do not use it for other purposes. Commercial use will void the guarantee.

⚠Do not stand, sit or place loads on the open door the dishwasher.

⚠Only use detergents and rinse aids produced specifically for dishwashers. Our company is not responsible for any damage that may occur due to misuse.

⚠ Do not drink water from the machine.

⚠ Due to the danger of explosion, do not place any chemical dissolving agents into the machine's washing section.

- Check the heat-resistance of plastic items before washing them in the machine.

⚠Only put items in the machine which are suitable for dishwashing, and take care not to overfill the baskets.

⚠Do not open the door while the machine is in operation, hot water may spill out. Safety devices ensure the machine stops if the door is opened.

⚠The machine door should not be left open. It may cause accidents.

⚠Place knives and other sharp objects in the cutlery basket in a blade-down position.

⚠⚠For models with the automatic door-opening system, when the EnergySave option is active, the door will open at the end of a program. To prevent damage to your dishwasher, do not attempt to close the door for one minute after it has opened. For effective drying, keep the door open for 30 minutes after a programme has ended. Do not stand in front of the door after the auto-open signal sounds.

⚠ In the case of a malfunction, repair should only be performed by an authorised service company, otherwise the warranty will be void.

⚠⚠Before repair work, the machine should be disconnected from the mains. Do not pull the cable to unplug the machine. Switch off the water tap.

Operation at a low voltage will cause a decline in performance levels.

⚠For safety, disconnect the plug once a program has finished.

⚠To avoid an electric shock, do not unplug the machine with wet hands.

⚠⚠Pull the plug to disconnect the machine from the mains, never pull on the cord.

2 INSTALLATION

2.1 Machine Positioning

When positioning the machine, place it in an area where dishes can be easily loaded and unloaded. Do not put the machine in an area where the ambient temperature falls below 0°C.

Read all warnings located on the packaging before removing the packaging and positioning the machine.

Place the machine close to a water tap and drain. Take into consideration that the connections will not be altered once the machine is in position.

Do not hold the machine by its door or panel.

Leave an adequate distance around the machine to allow ease of movement when cleaning.

⚠ Ensure the water inlet and outlet hoses are not squeezed or trapped and that the machine does not stand on the electrical cable while positioning.

Adjust the feet so the machine is level and balanced. The machine should be placed on flat ground otherwise it will be unstable and the door of the machine will not close properly.

⚠ Please install the decorative panel as indicated on the assembly sheet. Otherwise, the door may not open properly and steam leakage problem may occur.

2.2 Water Connection

We recommend fitting a filter to your water inlet supply in order to prevent damage to your machine due to contamination (sand, rust, etc.) from indoor plumbing. This will also help prevent yellowing and deposit formation after washing.

Note printing on the water inlet hose!

If models are marked with 25°, the water temperature may be max. 25 °C (cold water).

For all other models:

Cold water preferred; hot water max. temperature 60 °C.

2.3 Water Inlet Hose



⚠ **WARNING:** Use the new water inlet hose supplied with your machine, do not use an old machine's hose.

⚠ **WARNING:** Run water through the new hose before connecting.

⚠ **WARNING:** Connect the hose directly to the water inlet tap. The pressure supplied by the tap should be a minimum of 0.03 MPa and a maximum of 1 MPa. If the pressure exceeds 1 MPa, a pressure relief valve must be fitted between the connection.

⚠ **WARNING:** After the connections are made, turn the tap on fully and check for water leaks. Always turn off the water inlet tap after a wash program has finished.

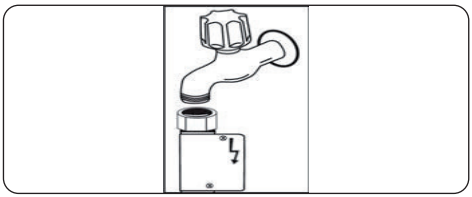

An Aquastop water spout is available with some models. Do not damage it or allow it to become kinked or twisted.

2.4 Drain Hose (Model Depending)

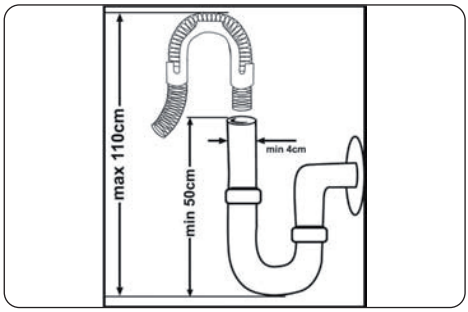

Connect the water drain hose directly to water drain hole or to the sink outlet spigot. This connection should be minimum 50 cm and maximum 110 cm from floor that dishwasher is placed.

IMPORTANT: Items will not wash properly if a drain hose longer than 4 m is used.

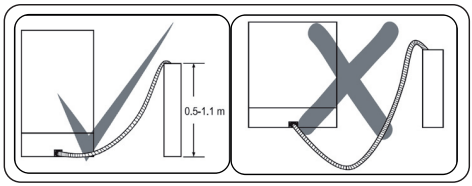

2.5 Electrical Connection

WARNING: Your machine is set to operate at 220-240 V. If the mains voltage supply to your machine is 110 V, connect a transformer of 110/220 V and 3000 W between the electrical connection.

Connect the product to a grounded outlet protected by a fuse complying with the values in the “Technical Specifications” table”.

The earthed plug of the machine must be connected to an earthed outlet supplied by suitable voltage and current.

In the absence of earthing installation, an authorised electrician should carry out an earthing installation. In the case of use without earthing installed, we will not be responsible for any loss of use that may occur.

The plug on this appliance may incorporate 13A fuse depending on the target country. (For Example UK, Saudi Arabia)

3 TECHNICAL SPECIFICATIONS

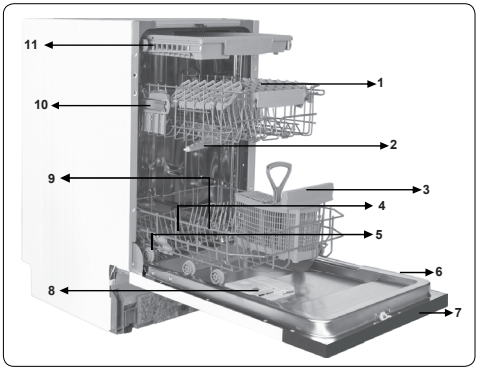

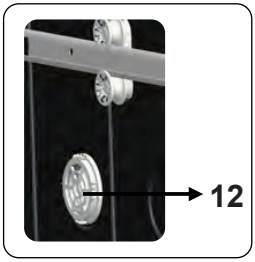

3.1 General Appearance

1. Upper basket with racks
2. Upper spray arm
3. Lower basket
4. Lower spray arm
5. Filters
6. Rating plate
7. Control panel
8. Detergent and rinse-aid dispenser
9. Cutlery basket
10. Salt dispenser
11. Upper basket track latch
12. **Mini Active Drying Unit:** This system provides better drying performance your dishes.

3.2 Technical Specifications

Capacity	10 place settings
Dimensions Height Width Depth	820-870 (mm) 450 (mm) 570 (mm)
Net weight	34,3 kg
Operating voltage / frequency	220-240V 50 Hz
Total current	10(A)
Total power	1900(W)
Water supply pressure	Maximum: 1 (Mpa) Minimum: 0.03 (Mpa)

RECYCLING

- Some machine components and packaging consist of recyclable materials.
- Plastics are marked with the international abbreviations:(>PE<, >PP<, etc.)
- The cardboard parts consist of recycled paper. They can be put into waste paper containers for recycling.
- Material unsuitable for domestic waste must be disposed of at recycling centres.
- Contact a relevant recycling centre to obtain information about disposal of different materials.

PACKAGING AND THE ENVIRONMENT

- Packaging materials protect your machine from damage that may occur during transportation. The packaging materials are environmentally friendly as they are recyclable. The use of recycled material reduces raw material consumption and therefore decreases waste production.

CE Declaration of Conformity

We declare that our products meet the applicable European Directives, Decisions and Regulations and the requirements listed in the standards referenced.

Disposal of Your Old Machine

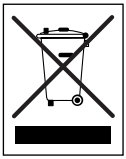

The symbol on the product or on its packaging indicates that this product may not be treated as household waste. Instead, it shall be taken to the applicable collection point for the recycling of electrical and electronic equipment. By ensuring this product is disposed of correctly, you will help prevent potential negative consequences for the environment and human health, which could otherwise be caused by inappropriate waste handling of this product. For more detailed information about recycling this product, please contact your local city office, your household waste disposal service or the shop where the product was purchased.

4 BEFORE USING THE APPLIANCE

4.1 Preparing Your Dishwasher For First Use

- Make sure the electricity and supply water specifications match the values indicated in the installation instructions for the machine.
- Remove all packaging material inside the machine.
- Set the water softener level.
- Fill the rinse aid compartment..

4.2 Salt Usage (IF AVAILABLE)

For a good washing function, the dishwasher needs soft, i.e. less calcareous water. Otherwise, White lime residues will remain on the dishes and the interior equipment. This will negatively affect your machine's washing, drying and shining performance. When water flows through the softener system, the ions forming the hardness are removed from the water and the water reaches the softness required to obtain the best washing result. Depending on the level of hardness of the inflowing water, these ions that harden the water accumulate rapidly inside the softener system. Therefore, the softener system has to be refreshed so that it operates with the same performance also during the next wash. For this purpose, dishwasher salt is used.

Machine can only be used by special dishwasher salt to soften the water. Do not use any small grained or powdered type of salts which can easily soluble. Using any other type of salt can damage your machine.

4.3 Fill The Salt (IF AVAILABLE)

To add softener salt, open the salt compartment cap by turning it counter clockwise. **(1) (2)** At first use, fill the compartment with 1 kg salt and water **(3)** until it is almost overflowing. If available, using a funnel **(4)** will make filling easier. Replace the cap and close it. After every 20-30 Cycles add salt into your machine until it fills up (approx. 1 kg).

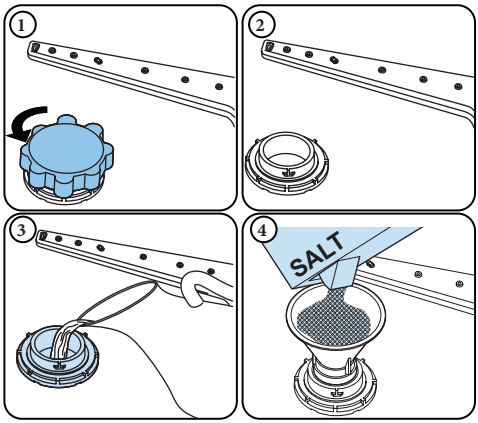

Only add water to the salt compartment on first use.

Use softener salt specifically produced for use in dishwashers.

When you start your dishwasher, the salt compartment is filled with water, therefore put the softener salt in prior to starting your machine.

If the softener salt has overflowed and you do not start the machine immediately, run a short washing program to protect your machine against corrosion.

4.4 Test Strip

Run water through the tap (1min.)	Keep the strip in the water (1sec)	Shake the strip.	Wait (1min.)	Set the hardness level of your machine.
	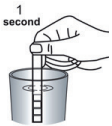	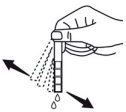	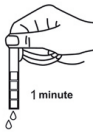	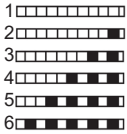

NOTE: The level is set to 3 as default. If the water is well water or has a hardness level above 90 dF, we recommend that you use filter and refinement devices.

4.5 Water Hardness Table

Level	German dH	French dF	British dE	Indicator
1	0-5	0-9	0-6	L1 is shown on the display.
2	6-11	10-20	7-14	L2 is shown on the display.
3	12-17	21-30	15-21	L3 is shown on the display.
4	18-22	31-40	22-28	L4 is shown on the display.
5	23-34	41-60	29-42	L5 is shown on the display.
6	35-50	61-90	43-63	L6 is shown on the display.

4.6 Water Softener System

The dishwasher is equipped with a water softener which reduces the hardness in the mains water supply. To find out the hardness level of your tap water, contact your water company or use a test strip (if available).

4.7 Setting

- Open the door of the machine.
- Turn on the machine, and press the Programme button as soon as the machine is turned on.
- Hold down the Programme button until “SL” disappears.
- The machine will display the last setting.
- Set the level by pressing the Programme button.
- Turn off the machine to save the setting.

4.8 Detergent Usage

Only use detergents specifically designed for domestic dishwashers. Keep your detergents in cool, dry places out of reach of children.

Add the proper detergent for the selected program to ensure the best performance. The amount of detergent needed depends on the cycle, load size, and soil level of dishes.

Do not fill detergent into the detergent compartment more than required; otherwise you can see whitish streaks or bluish layers on glass and dishes and may cause glass corrosion. Continued use of too much detergent may cause machine damage.

Using little detergent can result in poor cleaning and you can see whitish streaksin hard water.

See the detergent manufacturer's instructions for a further information.

4.9 Filling The Detergent

Push the latch to open the dispenser and pour in the detergent.

Close the lid and press it until it locks in place. The dispenser should be refilled just before the start of each programme. If the dishes are heavily soiled, place additional detergent in the pre-wash detergent chamber.

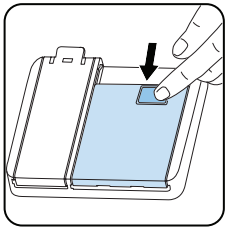

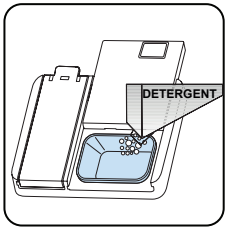

4.10 Using Combined Detergents

These products should be used according to the manufacturer's instructions.

Never put combined detergents into the interior section or the cutlery basket.

Combined detergents contain not only the detergent but also rinse-aid, salt replacement substances and additional components depending on the combination.

We recommend you do not use combined detergents in short programmes.

Please use powder detergents in such programmes.

If you encounter problems when using combined detergents, please contact the detergent manufacturer.

When you stop using combined detergents, make sure that water hardness and rinse aid settings are set to the correct level.

4.11 Rinse-aid Usage

The rinse aid helps to dry the dishes without streaks and stains. Rinse-aid is required for stain-free utensils and clear glasses. The rinse aid is automatically released during the hot rinse phase. If rinse aid dosage setting set too low, whitish stains remains on dishes and dishes do not dry and washed clean.

If rinse aid dosage setting set too height, you can see bluish layers on glass and dishes.

4.12 Filling The rinse-aid and setting

To fill the rinse aid compartment, open the rinse-aid compartment cap. Fill the compartment with rinse aid to the MAX level and then close the cap. Be careful not to overfill the rinse aid compartment and wipe up any spills.

In order to change the rinse aid level, follow the below steps before turning on the machine:

- Open the door of the machine.
- ·Turn on the machine, and press the Programme button as soon as the machine is turned on.
- Hold down the Programme button until “rA” disappears. Rinse aid setting follows water hardness setting.
- The machine will display the last setting.
- Change the level by pressing the programme button.
- Turn off the machine to save the setting.

The factory setting is “4”.

If the dishes are not drying properly or are spotted, increase the level. If blue stains form on your dishes, decrease the level.

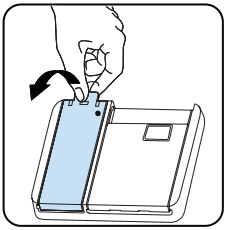

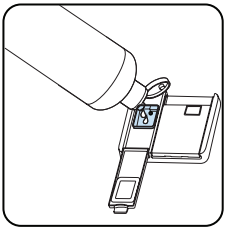

Level	Brightener Dose	Indicator
1	Rinse-aid not dispensed	r1 is shown on the display.
2	1 dose is dispensed	r2 is shown on the display.
3	2 doses are dispensed	r3 is shown on the display.
4	3 doses are dispensed	r4 is shown on the display.
5	4 doses are dispensed	r5 is shown on the display.

5 LOADING YOUR DISHWASHER

For best results, follow these loading guidelines.

Loading the household dishwasher up to the capacity indicated by the manufacturer will contribute to energy and water savings.

Manual pre-rinsing of tableware items leads to increased water and energy consumption and is not recommended You can place cups, glasses, stemware, small plates, bowls, etc. in upper basket. Do not lean long glasses against one another or they cannot remain steady and may receive damage. When placing long stem glasses and goblets, lean them against the basket edge or rack and not against other items.

Place all containers such as cups, glasses and pots into the dishwasher with the opening facing downwards otherwise water can collect on items.

If there is cutlery basket in machine, you are recommended to use the cutlery grid in order to obtain the best result. Place all large (pots, pans, lids, plates, bowls etc.) and very dirty items in the lower rack.

Dishes and cutlery should not be placed above each other.

⚠ **WARNING:** Take care not to obstruct the rotation of spray arms.

⚠ **WARNING:**Make sure after loading the dishes do not prevent opening the detergent dispenser.

5.1 Recommendations

Remove any coarse residue on dishes before placing the dishes in the machine. Start the machine with full load.

Do not overload the drawers or place dishes in the wrong basket.

⚠ **WARNING:** To avoid any possible injuries, place long-handle and sharp-pointed knives with their sharp points facing down or horizontally on the baskets.

Two Folding Racks

The folding racks allow large items, such as pots and pans, to be placed more easily. Each part can be folded separately. They can either be raised upwards or folded down.

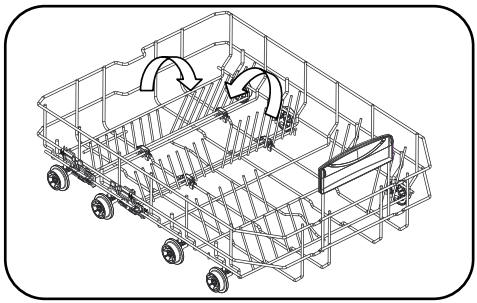

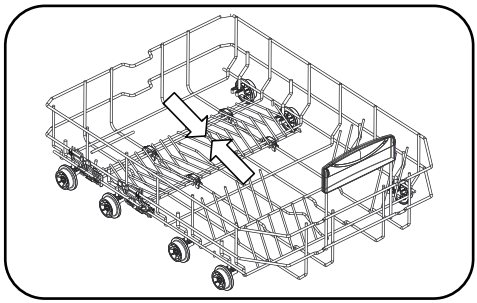

Height Adjustment

The upper basket includes a mechanism which enables the height of the basket to be adjusted up **(1)** or down **(2)** without having to remove the basket. Hold the basket on both sides and pull it up or push it down, ensuring both sides of the upper basket are in the same position.

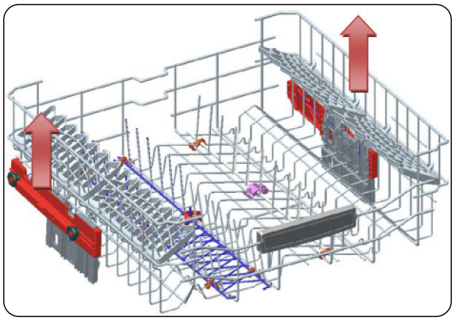

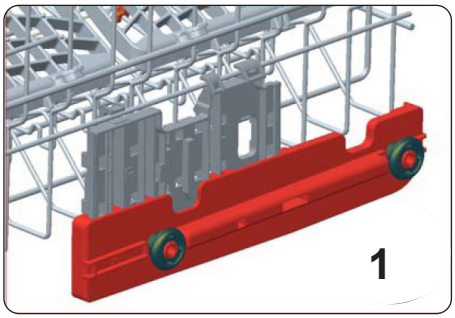

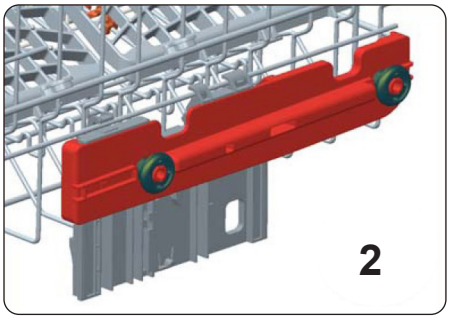

Height Adjustable Rack (peg type)

The height adjustable racks enable glasses and cups to be placed on or under the racks. The racks can be adjusted to 2 different heights. Cutlery and utensils can also be placed on the racks horizontally.

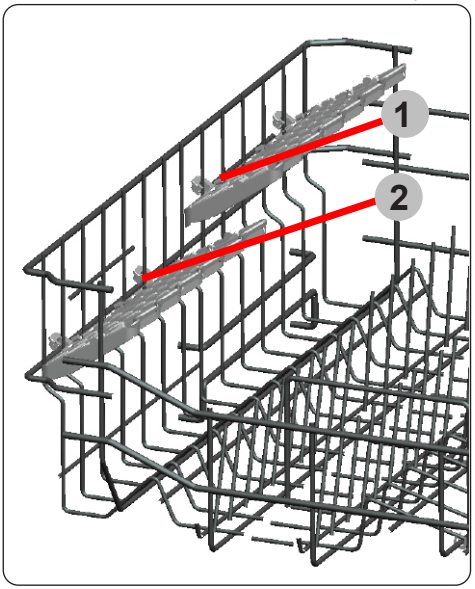

Upper Cutlery Basket

The upper cutlery basket is designed for the placement of large and small cutlery and utensils.

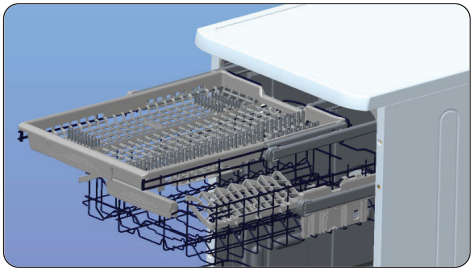

It is easily removed from the dishwasher, therefore allows ease of use when removing your items, along with the basket, after washing.

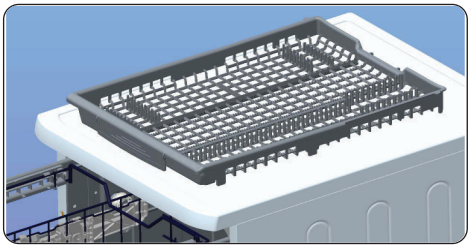

WARNING: Knives and other sharp objects must be placed horizontally in the cutlery basket.

5.2 Alternative Basket Loads

Lower Basket

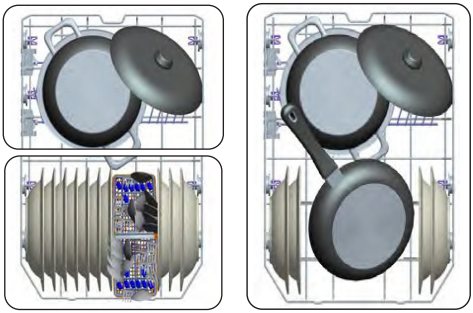

Top Basket

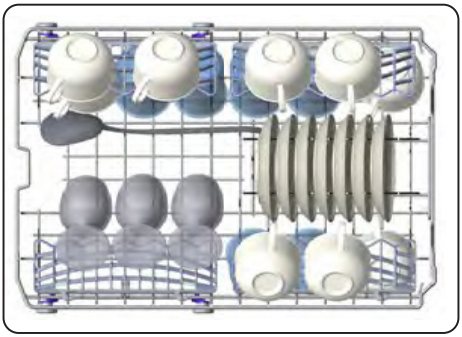

Incorrect Loads

Incorrect loading can cause poor washing and drying performance. Please follow the manufacturer's recommendations for a good performans result.

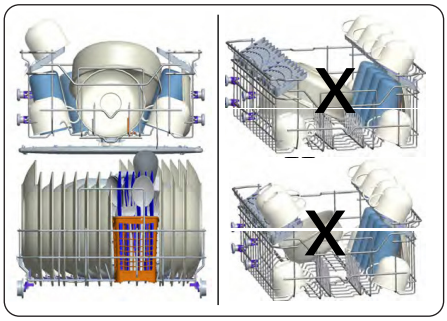

Important Note For Test Laboratories

For detailed information required for tests according to EN normatives and a softcopy of the manual, please send the model name and serial number to the following address:

info@svanelectro.com

SOFT TOUCH

Top basket

Height Adjustable Rack

These racks are designed to increase the capacity of the top basket. You can place your glasses and cups on the racks. You can adjust the height of these racks. Thanks to this feature, you can place different sizes of glasses under these racks.

Thanks to height adjustment plastics mounted on the basket, you can use your racks in 2 different heights. In addition, you can place long forks, knives and spoons on these racks laterally, so that they do not block the revolution of propeller.

The soft touch feature on the racks serves to place the fine stemmed glass.

The wineglass is placed in the area shown at the picture.

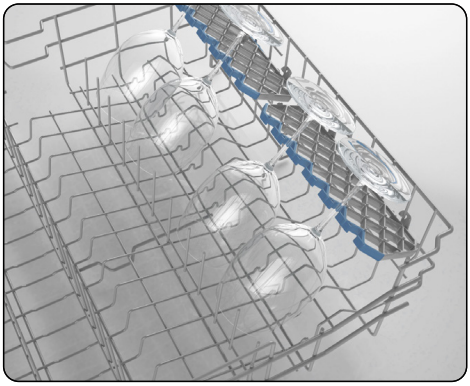

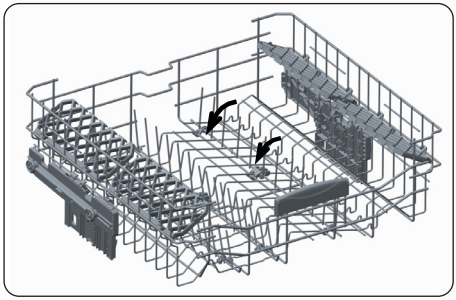

Foldable racks

Foldable racks on the upper basket are designed in order to let you place big items easier such as pots, pans, etc. If requested, each part can be folded separately, or all of them can be folded and larger spaces can be obtained. You can use foldable racks by raising them upwards,or by folding down.

6 PROGRAMME TABLE

	P1	P2	P3	P4	P5
Program Name:	Eco	Intensive 65°C	Super 50’	Quick 30’	Prewash
Type of Soil:	Standard program for normally soiled daily using dishes with reduced energy and water consumptions.	Suitable for heavily soiled dishes.	Suitable for normally soiled daily dishes with faster program.	Suitable for lightly soiled dishes and quick wash.	Suitable to rinse dishes that you plan to wash later.
Level of Soil:	Medium	Heavy	Medium	Light	Light
Amount of Detergent: A: 25 cm3 B: 15 cm3”	A	A	A	A	-
Program Duration (h:min)	03:42	02:15	00:50	00:30	00:15
Electiricity consumption (kWh/cycle)	0,755	1,550	0,950	0,670	0,020
Water consumption (l/cycle)	11,0	17,6	11,2	10,0	3,5

- The program duration may change according to the amount of dishes, the water temperature, the ambient temperature and selected additional functions.
- Values given for programmes other than the eco programme are indicative only
- If your model has turbidity sensor, it has Auto program instead of Intensive program.
- Eco programme is suitable to clean normally soiled tableware, that for this use, it is the most efficient programme in terms of its combined energy and water consumption, and that it is used to assess compliance with the EU ecodesign legislation.
- Washing tableware in a household dishwasher usually consumes less energy and water in the use phase than hand dishwashing when the household dishwasher is used according to the manufacturer’s instructions.
- Only use powder detergent for short programs.
- Short programs do not include drying.
- To assist drying, we recommend slightly opening the door after a cycle is complete.
- You can access the product database where the model information is stored by reading the QR code on the energy label.

NOTE: According to regulations 1016/2010 and 1059/2010, Eco program energy consumption values may differ. This table is in line with regulations 2019/2022 and 2017/2022.

7 THE CONTROL PANEL

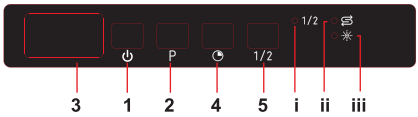

1. On/Off button
2. Program Selection Button
3. Display
4. Delay Button
5. Half Load Button

i. Half Load Led

ii. Salt Indicator

iii. Rinse Aid Indicator

1. On/Off Button

Switch the machine on by pressing On / Off button. When machine is on, "--" will be shown on the Display (3).

2. Program Selection Button

Select a suitable programme for your dishes by pressing Program Selection button. The programme will start automatically when the door is closed.

3. Display

The Display shows the number and total time of the selected programme alternately and the remaining time during operation.

4. Delay Button

Press the Delay button to delay the start time of the selected programme for 1 hour up to 19 hours. Pressing the button once delays the start time for 1 hour, and continuing to press will increase the delay time. Press the Delay button to change or cancel the delayed start. If you switch off the machine while delay timer is active, the delayed time is cancelled.

5. Half Load Button

Press the Half Load button to reduce the duration of the selected programme, and therefore decrease your energy and water consumption. When Half Load option is selected, Half Load led (i) will illuminate.

NOTE: If you decide not to start the selected programme, please see the "Changing a Programme" and "Cancelling a Programme" sections.

NOTE: When there is insufficient softening salt, the Salt Lack Warning Indicator (ii) will illuminate to indicate the salt chamber needs filling.

NOTE: When there is insufficient rinse aid, the Rinse Aid Lack Warning Indicator (iii) will illuminate to indicate the rinse aid chamber needs filling.

Changing a Programme

Follow the steps below if you would like to change the programme while in operation.

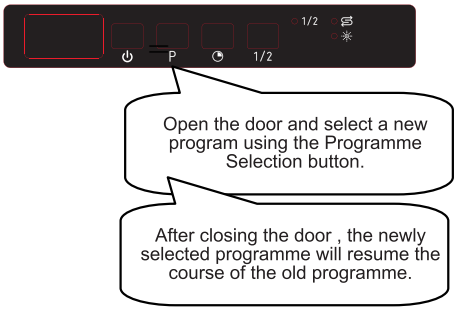

NOTE: Open the door slightly at first to avoid water spillage if you wish to stop the wash programme before it is complete.

Cancelling a Programme

Follow the steps below if you would like to cancel a programme while in operation.

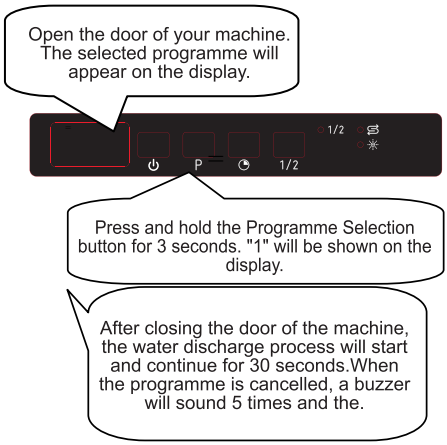

Switching the Machine Off

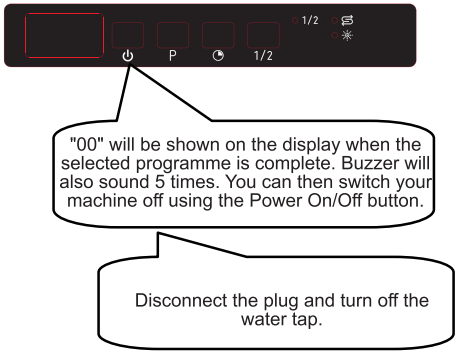

NOTE: Do not open the door before the programme is complete.

NOTE: If the door of the machine is opened or the power is cut off while a programme is in operation, the programme will continue when the door is closed or the power returns.

NOTE: If the power is cut or the machine door is opened during the drying process, the programme will terminate. Your machine will now be ready for a new programme selection.

Buzzer Sound Control

To change the buzzer sound level, follow the below steps:

1. Open the door and press Programme (2) and Delay (4) buttons simultaneously for 3 seconds.

2. When sound setting is recognized, buzzer gives a long sound and machine will display last set level, from “S0” to “S3”.

3. To decrease sound level press Programme button (2). To increase sound level, press Delay button (4).

4. To save the selected sound level, turn off the machine.

”S0” level means all voices are off. Factory setting is “S3”.

Save Power Mode

To activate or deactivate save power mode, follow the below steps:

1. Open the door and press Delay (4) and Half Load (5) buttons simultaneously for 3 seconds.

2. After 3 seconds, the machine will display last Setting, “IL1” or “IL0”.

3. When Save Power Mode is activated, “IL1” will be displayed. On this mode, interior lights will turn off 4 minutes after the door is opened, and the machine will turn off after 15 minutes of no activity in order to save energy.

4. When Save Power Mode is deactivated “IL0” will be displayed. If Save Power Mode is deactive, interior lights will be on as long as the door is open, and the machine will always be on unless it is turned off by user.

5. To save the selected setting, turn off the machine.

In factory setting, Save Power Mode is active.

Infoled 2.1 (Model Dependent)

LED Indicator	State of the Machine
Red, continuous	The machine is running a program.
Red, flashing	A program is cancelled.
Red, flashing rapidly	The machine has a fault. Refer to section "Automatic fault warnings and what to do".
Green, continuous	A program is finished.

8 CLEANING AND MAINTENANCE

Cleaning your dishwasher is important to maintain the machine's service life
Make sure that the water softening setting (If available) is done correctly and correct amount of detergent is used to prevent limescale accumulation. Refill the salt compartment when the salt sensor light comes on.Oil and limescale may build up in your Dishwasher over time. If this occurs:

- Fill the detergent compartment but do not load any dishes. Select a programme which runs at high temperature and run the Dishwasher empty. If this does not clean your Dishwasher sufficiently, use a cleaning agent designed for use with dishwashers.
- To extend the life of your dishwasher, clean the appliance regularly on each month
- Wipe the door seals regularly with a damp cloth to remove any accumulated residue or foreign objects.

8.1 Filters

Clean the filters and spray arms at least once a week. If any food waste remains or foreign objects on the coarse and fine filters, remove them and clean them thoroughly with water.

a) Micro Filter **b)** Coarse Filter

c) Metal Filter

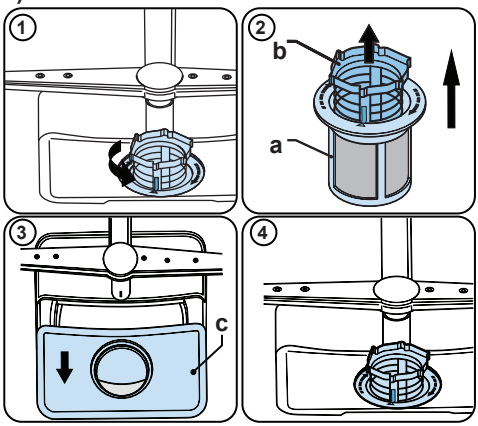

To remove and clean the filter combination, turn it counter clockwise and remove it by lifting it upwards **(1)**.Pull the coarse filter out of the micro filter **(2)**.Then pull and remove the metal filter **(3)**.Rinse the filter with lots of water until it is free of residue. Reassemble the filters. Replace the filter insert, and rotate it clockwise **(4)**.

- Never use your dishwasher without a filter.
- Incorrect fitting of the filter will reduce the washing effectiveness.
- Clean filters are necessary for proper running of the machine.

8.2 Spray Arms

Make sure that the spray holes are not clogged and that no food waste or foreign object is stuck to the spray arms. If there is any clogging,remove the spray arms and clean them under water. To remove the upper spray arm undo the nut holding it in position by turning it clockwise and pulling it downwards. Make sure that the nut is properly tightened when refitting the upper spray arm.

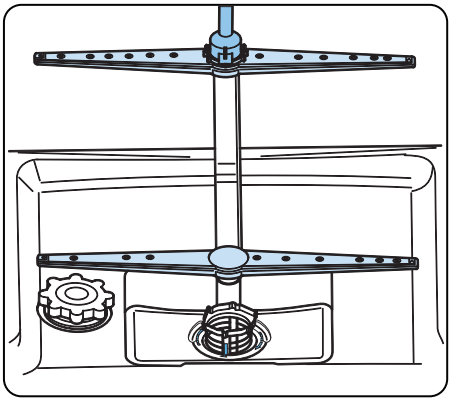

8.3 Drain Pump

Large food residues or foreign objects which were not captured by the filters may block the waste water pump. The rinsing water will then be above the filter.

⚠ Warning Risk of cuts!
When cleaning the waste water pump, ensure that you do not injure yourself on p ieces of broken glass or pointed implements.
In this case:
1. First always disconnect the appliance from the power supply.
2. Take out baskets.
3. Remove the filters.
4. Scoop out water, use a sponge if required.
5.Check the area and remove any foreign objects.
6. Install filters.
7. Re-insert baskets.

9 TROUBLESHOOTING

FAULT	POSSIBLE CAUSE	TROUBLESHOOTING
The programme does not start.	Your Dishwasher is not plugged in.	Plug your Dishwasher in.
	Your Dishwasher is not switched on.	Switch your Dishwasher on by pressing the On/Off button.
	Fuse blown.	Check your indoor fuses.
	Water inlet tap is closed.	Turn on the water inlet tap.
	Your Dishwasher door is open.	Close the Dishwasher door.
	Water inlet hose and machine filters are clogged.	Check the water inlet hose and machine filters and make sure they are not clogged.
Water remains inside the machine.	Water drain hose is clogged or twisted.	Check the drain hose, then either clean or untwist it.
	The filters are clogged.	Clean the filters.
	The programme is not finished yet.	Wait until the programme is finished.
Machine stops during washing.	Power failure.	Check mains power.
	Water inlet failure.	Check water tap.
Shaking and hitting noises are heard during a wash operation.	The spray arm is hitting the dishes in the lower basket.	Move or remove items blocking the spray arm.
Partial food wastes remain on the dishes.	Dishes placed incorrectly, sprayed water not reaching affected dishes.	Do not overload baskets.
	Dishes leaning each another.	Place dishes as instructed in the section on loading your dishwasher.
	Not enough detergent used.	Use the correct amount of detergent, as instructed in the programme table.
	Wrong wash programme selected.	Use the information in the programme table to select the most appropriate programme.
	Spray arms clogged with food waste.	Clean the holes in the spray arms with thin objects.
	Filters or water drain pump clogged or filter misplaced.	Check the drain hose and filters are correctly fitted.

FAULT	POSSIBLE CAUSE	TROUBLESHOOTING
Whitish stains remains on dishes.	Not enough detergent used.	Use the correct amount of detergent, as instructed in the programme table.
	Rinse aid dosage and/or water softener setting set too low.	Increase rinse aid and/or water softener level.
	High water hardness level.	Increase water softerner level and add salt.
	Salt compartment cap not closed properly.	Check that the salt compartment cap is closed properly.
Dishes do not dry.	Drying option is not selected.	Select a programme with a drying option.
	Rinse aid dosage set too low.	Increase rinse aid dosage setting.
Rust stains form on the dishes.	Stainless-steel quality of the dishes is insufficient.	Use only dishwasher-proof sets.
	High level of salt in wash water.	Adjust the water hardness level using water hardness table.
	Salt compartment cap not closed properly.	Check that the salt compartment cap is closed properly.
	Too much salt spilled in the Dishwasher while filling it with salt.	Use funnel while filling salt to the compartment to avoid spillage.
	A poor mains grounding.	Consult a qualified electrician immediately.
Detergent remains in the detergent compartment.	Detergent was added when the detergent compartment was wet.	Make sure detergent compartment is dry before use.

AUTOMATIC FAULT WARNINGS AND WHAT TO DO

TROUBLE CODE	POSSIBLE FAULT	WHAT TO DO
FF	Water inlet system failure	Make sure the water inlet tap is open and water is flowing.
		Separate the inlet hose from the tap and clean the filter of the hose.
		Contact for service if the error continues.
F5	Pressure system failure	Contact for service.
F3	Continuous water input	Close the tap and contact for service.
F2	Inability to discharge water	Water discharge hose and filters may be clogged.
		Cancel the program.
		If the error continues, contact for service.
F8	Heater error	Contact for service.
F1	Overflow	Unplug the machine and close the tap.
		Contact for service.
F7	Overheating	Contact for service.
F6	Faulty heater sensor	Contact for service.
HI	High voltage failure	Contact for service.
LO	Low voltage failure	Contact for service.

The installation and repairing procedures should always carried out by the Authorised Service Agent in order to avoid possible risks. The manufacturer shall not be held liable for damages that may arise from procedures carried out by unauthorised persons. Repairs may be carried out by technicians only. If a component has to be replaced, ensure that only original spare parts are used.

Improper repairs or use of non-original spare parts may cause considerable damage and put the user at considerable risk.

Contact information for your customer service can be found on the back of this document.

Function-relevant genuine spare parts according to the corresponding Ecodesign order can be obtained from Customer Service for a period of at least 10 years from the date on which your appliance was placed on the market within the European Economic Area.

HYUNDAI

5xxxxxxx

Importado por S.T. S.L con CIF B73737553
Distribuido por KOREA SMART HOME, S.L con CIF B56843261 y dirección Av. Altos Hornos S/N. Pto. Sagunto (46520). Valencia, España.
Licenciado por HYUNDAI CORPORATION HOLDINGS, KOREA