aspes

USER MANUAL

Cooker hood

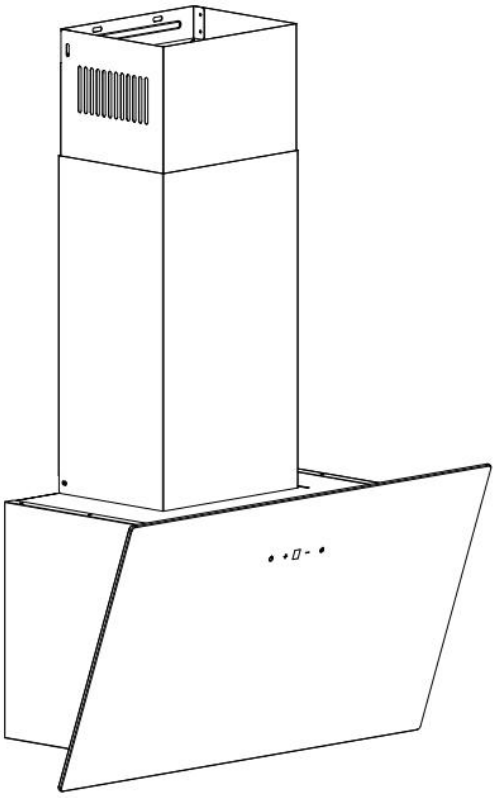

ACPD601AIB

Read this manual carefully and keep it for future reference.

Dear Customer,

Congratulations on purchasing this appliance. Please read the following instructions carefully and follow them to prevent possible damages. We assume no liability for damage caused by disregard of the instructions and improper use.

Contents

Safety instructions 1

Installation 2

Control panel and key functions 5

Cleaning and maintenance 6

Trouble shooting 6

Notes on environmental protection 7

Disposal considerations 7

Note:This appliance is intended for domestic use only!

SAFETY INSTRUCTIONS

- Thank you for purchasing this cooker hood. Please read the instruction manual carefully before you use the cooker hood, and keep it in a safe place.
- The installation work must be carried out by a qualified electrician or competent person. Before you use the cooker hood, make sure that the voltage (V) and the frequency (Hz) indicated on the cooker hood are exactly the same as the voltage and the frequency in your home.
- The manufacturer and the agent will not bear any responsibility for the damage caused by inappropriate installation and usage.
- Children under the age of 8 must not use the cooker hood.
- The appliance is not intended for commercial use, but only for household and similar environments.
- The cooker hood and its filter mesh should be cleaned regularly in order to keep it in good working order.
- Before cleaning, switch the power off at the main supply.
- Clean the cooker hood according to the instruction manual and keep the cooker hood from the danger of burning.
- Prohibit putting the cooker hood by fire.
- If the appliance does not function normally, contact the specialist company.
- This device may be only used by children 8years old or older and persons with limited physical, sensory and mental capabilities and /or lack of experience and knowledge, provided that they have been instructed in use of the device by a responsible person who understands the associated risks.
- If the supply cord is damaged, it must be replaced by the manufacturer, its service agent or similarly qualified persons in order to avoid a hazard.
- If the cooker hood is used at the same time as appliances burning gas or other fuels, the room must be adequately ventilated.
- Do not fambe under the cooker hood. Accessible parts may become hot when used with cooking appliances.

Important hints on installation

- The air must not be discharged into a flue that is used for exhausting fumes from appliances burning gas or other fuels (not applicable to appliances that only discharge the air back into the room)
- Regulations concerning the discharge of air have to be fulfilled.

INSTALLATION

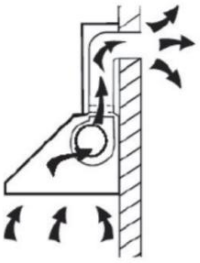

Preparation

If you have an outlet to the outside, your cooker hood can be connecte as below picture by means of an extraction duct (enamel, aluminium, flexible pipe or inflammable material with an interiror diameter of 150mm)

- Before installation, turn the unit off and unplug it from the outlet
- The cooker hood should be placed at a distance of 65-75cm above the cooking zone for best effect.

Installation (Vent outside)

1
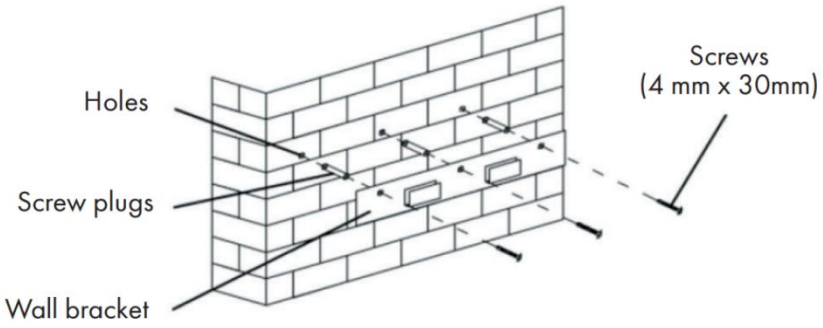
Drill 3x8mm holes to accommodate the bracket. Screw and tighten the bracket onto the wall with the screws and screw plugs provided.

Note: The illustration is a reference image, your device may differ

2
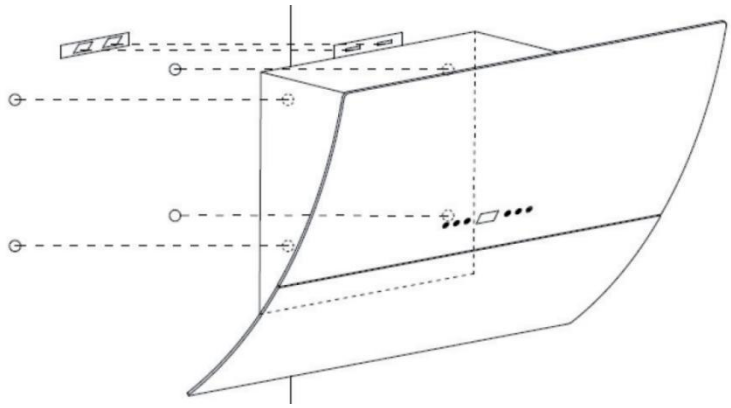
For inclined model, you need to drill 4x8mm extra holes and use screw plugs and screws before installation.

Note: The illustration is a reference image, your device may differ

Chimney Installation

1	2
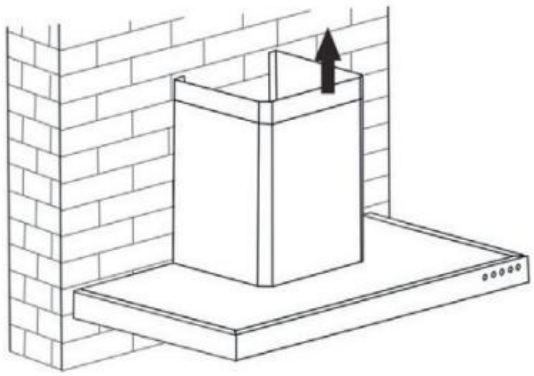	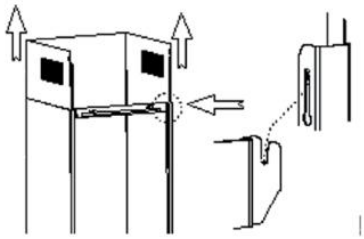
Put the upper chimney into lower chimney. Then pulling out the upper chimney upwards. Adjust to reach the height required.	Sliding the chimney to adjust the chimney height. When the height you required is reached, then hang the fixing hole to the fixing screws as showed in picture

Note: The illustration is a reference image, your device may differ

Installation (Vent inside)

If you do not have an outlet to the outside, exhaust pipe is not required and the installation is similar to the one shown in section " Installation (Vent outside)".

Installing the Carbon Filter

Note: Carbon filter is not included.

1	2
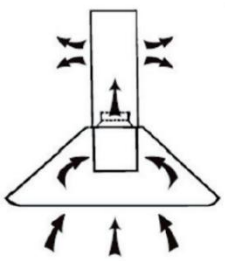	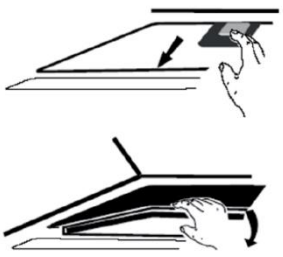
Activated carbon filter can be used to trap odors	In order to install the activated carbon filter, the grease filter should be detached first. Press the lock and pull it downward.

Note: The illustration is a reference image, your device may differ

3	4
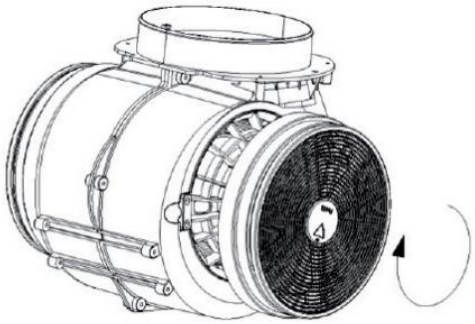	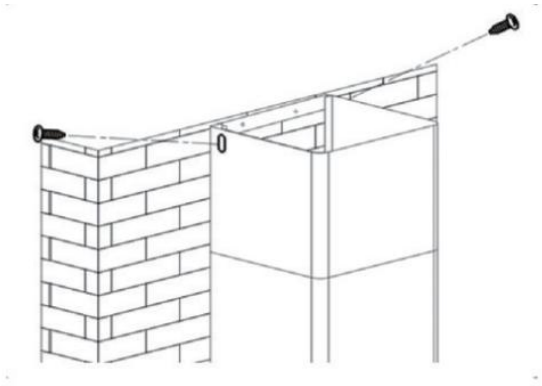
Plug the activated carbon filter into the unit and turn it in clockwise direction. Repeat the same on the other side. Make sure the filter is securely locked. Otherwise, it would loosen and cause dangerous. When activated carbon filter attached, the suction power will be lower.	Remove all blue protective film on chimney and cooker hood, the installation is now finished.

Note: The illustration is a reference image, your device may differ

CONTROL PANEL AND KEY FUNCTIONS

		
	**ON/OFF**	**Press they key to switch on the motor**
	**Speed**	**Press the key to increase the speed**
	**Display**	**Display window**
	Speed	**Press the key to decrease the speed**
	**Light**	**Press the key to switch the light on or off**

Timer / off timer

The extractor hood has a switchable automatic off timer (5 min). To activate this, press icon **+** and **-**

Simultaneously for 5 seconds. After that the timer activates automatically and turns off the engine and lights after 5 minutes.

CLEANING AND MAINTENANCE

Turn off the cooker hood before cleaning and maintenance and unplug the appliance from the wall outlet. The exterior surfaces are susceptible to scratches and stains. Therefore, do not use abrasive cleaners and wipe away any alkaline or acidic residue (lemon juice, vinegar) immediately after cleaning.

Control Panel

The control panel can be cleaned with a damp cloth and a mild dishwashing detergent. Before cleaning, make sure the cloth is clean and well wrung. Use a dry, soft cloth to remove the excess moisture after cleaning.

Monthly Cleaning for Grease Filter

Clean the filter every month can prevent any risk of fire. The filter collects grease, smoke and dust, so the filter is directly affecting the efficiency of the cooker hood. If not cleaned, the grease residue (potential flammable) will saturate on the filter. Clean it with household cleaning detergent.

TROUBLE SHOOTING

Fault	Possible Cause	Solution
Light on, but motor does not work	The leaf blocked	Get rid of the blocking
	The capacitor damaged	Replace the capacitor
	The motor jammed, Bearing damaged	Replace the motor
	The internal wire of motor off or a bad smell from the motor	Replace the motor
Light does not work, motor does not work	Light damaged	Replace the lights
	Power cord looses	Connect the wires as per the electric diagram
Shake of the body	The leaf damaged and causes shaking	Replace leaf
	The motor is not tightly hanged	Lock the body tightly
	The body is not tightly hanged	Fix the body tightly
Insufficient suction	The distance between the body and the gas top too long	Readjust the distance
	Too much ventilation from open doors or windows	Choose a new place and resemble the machine

NOTES ON ENVIRONMENTAL PROTECTION

- During cooking, make sure that there is sufficient air supply so that the cooker hood can operate efficiently and with low operating noise.
- Adjust the fan speed to the amount of steam produced during cooking. Use the intensive mode only when necessary. Th lower the fan speed, the less energy is consumed.
- If large amounts of steam are produced during cooking, select a high fan speed in good time. If the cooking steam has already dispersed in the kitchen, the cooker hood must be operated longer.
- Switch off the cooker hood when you no longer need it
- Switch off the lighting when you no longer need it
- Clean the filter at regular intervals and replace it if necessary to increase the effectiveness of the ventilation system and prevent fire hazards.
- Always put the lid on when cooking to reduce cooking steam and condensation.

DISPOSAL OF PACKAGE AND PRODUCT



Dispose of packaging in an environmentally-friendly manner. This appliance is labelled in accordance with European Directive 2012/19/EU concerning used electrical and electronic appliances (waste electrical and electronic equipment -

WEEE). The guideline determines the frame work for the return and recycling of used appliances as applicable throughout to the EU.

PACKAGE INFORMATION: Packaging materials of the product are manufactured from recyclable materials

in accordance with our National Environment Regulations. Do not dispose of the packaging materials together with the domestic or other wastes. Take them to the packaging material collection points

designated by the local authorities

Product fiche

Description	Symbol	Value	Unit
Model identification	ACPD601AIB		
Annual Energy Consumption	AEC_{hood}	7,8	kWh/a
Time increase factor	f	1,2	
Fluid Dynamic Efficiency	FDE_{hood}	22,7	
Fluid Dynamic Efficiency class		A	
Energy Efficiency Index	EEI_{hood}	32	
Energy Efficiency class		A++	
Measured air flow rate at best efficiency point	Q_{BEP}	157,2	m^3/h
Measured air pressure at best efficiency point	P_{BEP}	14,5	Pa
Maximum air flow	Q_{MAX}	370	m^3/h
air flow at minimum and maximum speed in normal use, intensive or boost excluded		217,5/348,2	m^3/h
air flow at intensive or boost setting		/	m^3/h
Measured electric power input at best efficiency point	W_{BEP}	14,5	W
Nominal power of the lighting system	W_L	2,0	W
Average illumination of the lighting system on the cooking surface	E_{middle}	80	Lux
Lighting Efficiency	LE hood	40	lx/W
Lighting Efficiency class		A	
Grease Filtering Efficiency	GFE hood	66,7	%
Grease Filtering Efficiency class		D	
power consumption in standby mode	P_s	/	W
power consumption in off mode	P_o	0,4	W
Sound power level	L_{WA}	48/59	dB

www.aspes.es
aspes@sareteknika.es
902 99 69 01/944 04 14 08